INSTALLATION INSTRUCTIONS
FOR BOATS WITH CROSSMEMBERS THAT ARE 9 ½ - 24" APART

1. Mark the location of all crossmembers with masking tape.

2. Using the specifications below, determine the appropriate mount location for your ladder and handles and mark the positions.

MOUNTING OPTIONS & SPECIFICATIONS

a. Determine the best mounting position for your ladder and handles. When space allows, LilliPad's preference is position "C" *(pictured below).* Position "C" provides added stability making the ladder easier to climb and opens the deck for entry onto the boat.

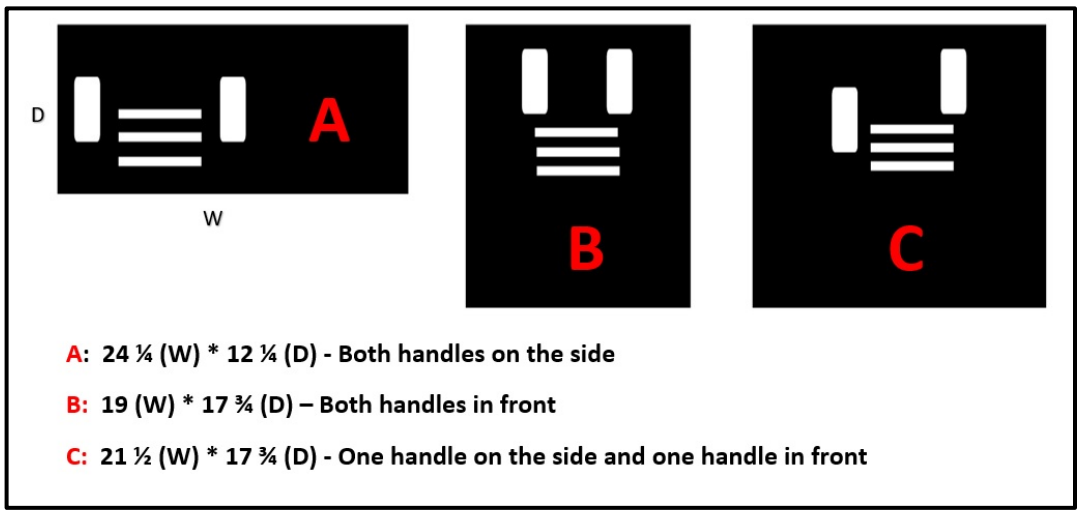

A: 24 ¼ (W) * 12 ¼ (D) - Both handles on the side

B: 19 (W) * 17 ¾ (D) – Both handles in front

C: 21 ½ (W) * 17 ¾ (D) - One handle on the side and one handle in front

POSITION "C"

b. Mount brackets must be secured directly to the chassis by using the supplied extension brackets to bridge the boats crossmembers. The brackets must be properly spaced to allow the ladder to slide smoothly in and out of the mount brackets.

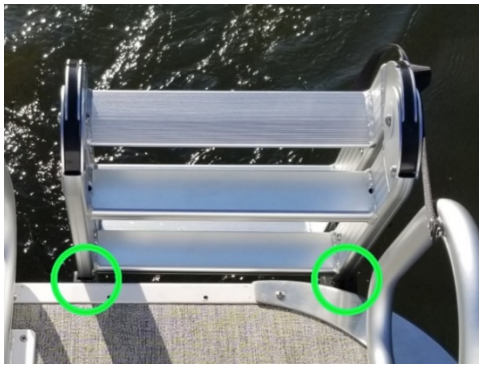

c. The outer edge of the mount bracket should be positioned to allow a 1/4 – 1/2” gap between the folded ladder and the rub rail. *(Note the reveal on the brackets, if needed)*

d. Handles must be properly spaced from the ladder and positioned to ensure that a minimum of one screw on each side of the handle is secured <u>through a cross member</u>. (Minimum of 1 “X” & 1 “Y” per handle) If this requirement can not be met, proper spacing for handle backer plates is needed.

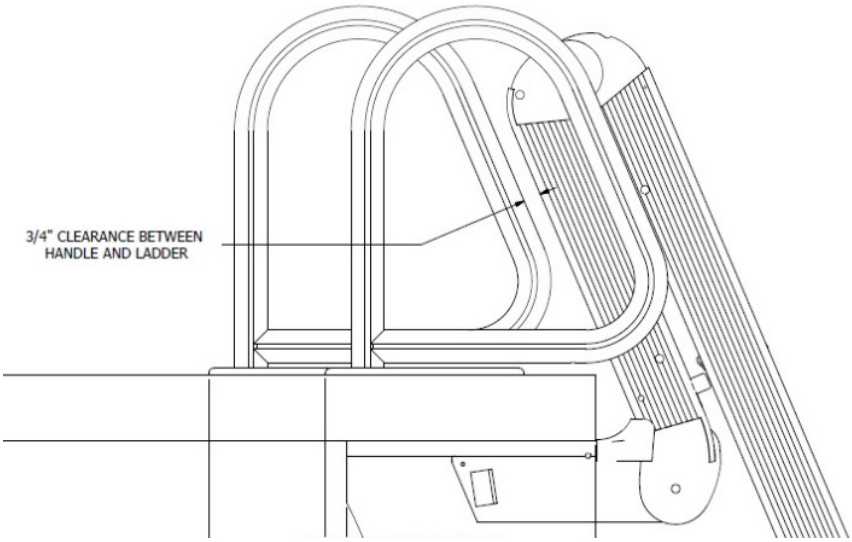

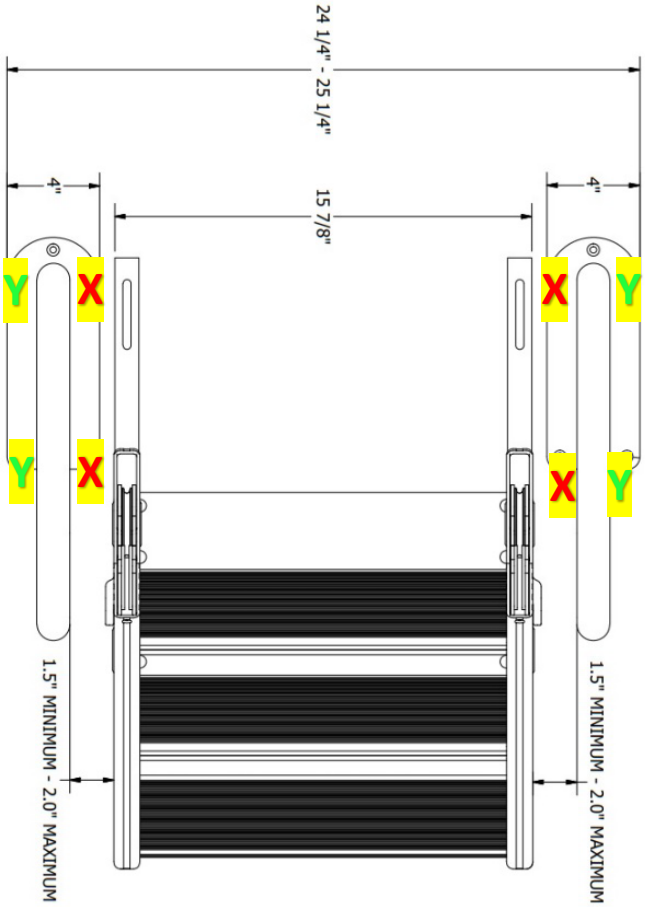

IMPORTANT: Now that you have determined the mounting position of your ladder and handles you are ready to begin installation. If your boat has an underfloor skin AND you are unable to secure the handles to a crossmember as outlined in spcificiaiton “d” you must drop the underfloor skin and install your handles, first. Once your handles are installed, reinstall the underloor skin and complete the process to install your ladder, followed by installtion of the J-Snap Post.

LADDER INSTALLATION PROCEDURE

1. Secure the mount bracket to the extension bracket, by installing a #14-1 ¼” self-drilling screw through the slot in the mount bracket into the pre-drilled hole in the extension bracket. *The mount bracket should be secured to the extension with the pin slot end flush or extended to meet the reveal noted in specification “c”.* Leave slightly loose for adjustment in a future step.

2. Put the bracket assemblies on the ladder and pin them in place. (The end of the bracket with the pin slot goes in first to align with the retaining pin hole)

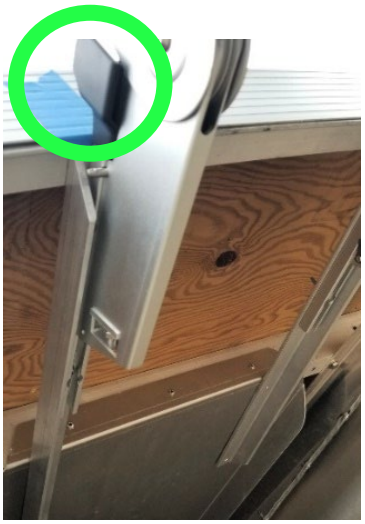

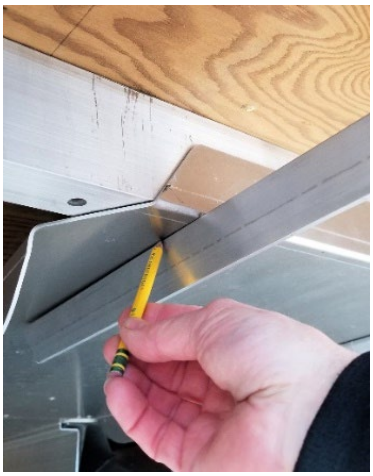

3. Hold the bracket assemblies to the chassis and mark the predetermined mount locations on the cross members. *(Confirm your reveal from specification “c”. Improper positioning will cause the retracted ladder to hit the rub rail.)*

4. Remove one bracket assembly from the ladder.

5. Hold the loose bracket assembly in the mounting location and mark the pre-drilled hole location on the crossmember closest to the rub rail.

6. Drill a 3/16” hole, in the crossmember, in the noted location.

7. Install a #14 1 ¼” self-drilling screw. Leave slightly loose for adjustment in future step.

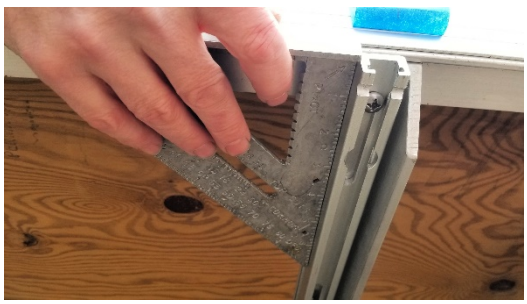

8. Using a square, confirm that your bracket is squared in your mount location.

9. Drill a 3/16” hole in the second slot line as close to the center of the crossmember as possible.

10. Install a #14 1 ¼” self-drilling screw. Leave slightly loose for adjustment in future step.

11. Slide the ladder into the installed mount bracket and confirm the mount location marks of the second bracket.

12. Remove the bracket from the ladder and repeat steps 5 – 10 to complete assembly of the second mount bracket.

13. Install the ladder into the mount brackets and adjust the position of the brackets until the ladder slides smoothly in and out and then tighten the screws. (Do NOT over torque screws.)

14. To allow your ladder to slide easily, apply a small amount of lubricant to the bracket.

HANDLE INSTALLATION PROCEDURE

REVO Ladder's handles are designed to mount independently from the ladder. Install handles to the following specifications:

a. Handles mounted to the side of the ladder must have a minimum of 1 ½" clearance and a maximum of 2" clearance between the ladder and handle.

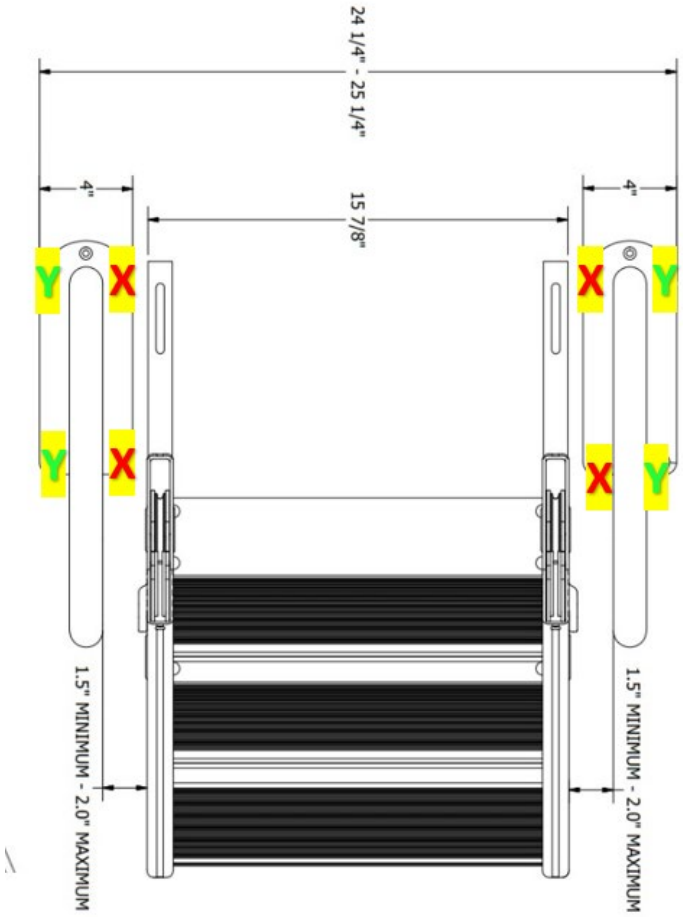

b. Handles must be positioned to ensure that a minimum of one screw on each side of the handle is secured <u>through a cross member</u>. (Minimum of 1 "X" & 1 "Y" per handle) or backer plates must be used.

c. Handles mounted in front of the folded ladder must be spaced with 3/4" clearance.

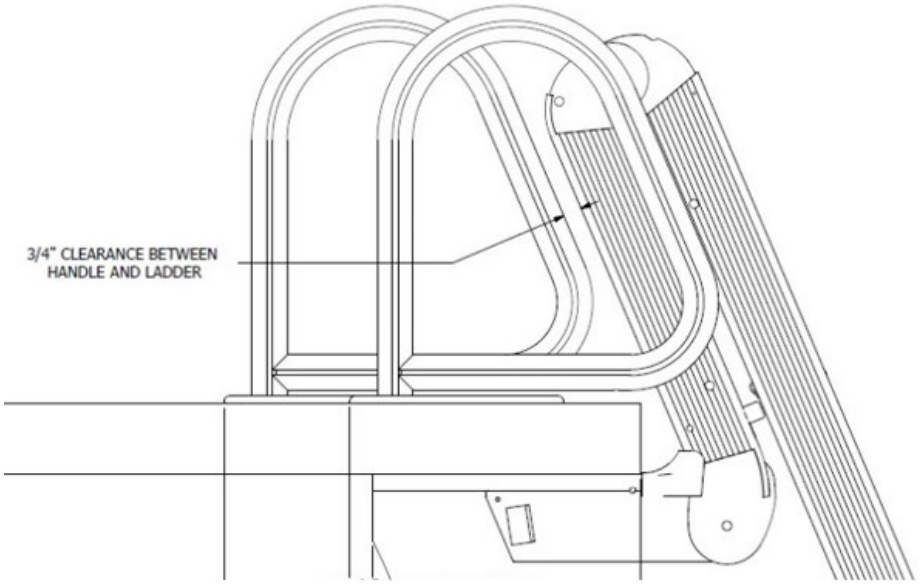

1. Position handles in predetermined mount locations.

2. Mark all five screw locations for each handle using a black marker.

3. Confirm that a minimum of one screw will be secured through a cross member on each side of the handle. If this minimum requirement is not met, *the backer plates in your mount kit must be used for installation.*

4. Drill 3/16” holes in each screw location.

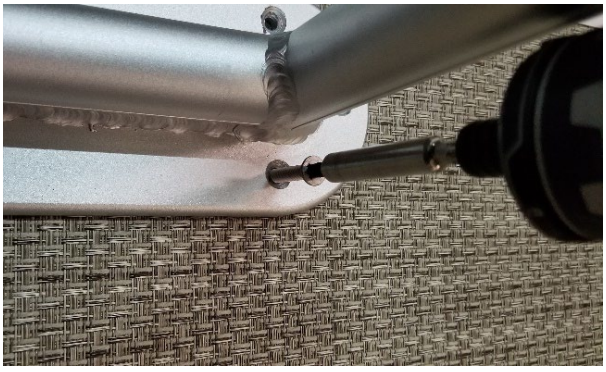

5. Place the handle in the mount location and install #14-2” self-drilling screws. (Do NOT over torque screws.)

If required, secure with the pre-drilled backer plates using the included screws, nuts and washers.

With the ladder and handles fully installed you must now install the <u>J-Snap Post</u> which will secure the retracting/retaining strap to the handle. Proper placement of the J-Snap Post is critical to ensuring the ladder is secured to the boat when in the stowed position. Use the following procedure to properly install the J-Snap Post:

1. Connect the Ladder Release button to the post on the ladder. This is a collet-style fastener that is released by lifting the button. To secure, simply push the button onto the post.

2. With the ladder release connected, pull the loose strap back to the inside of the handle to the point that it is snug but not tight; mark the location on the inside of the handle where the snap meets.

3. Drill an 1/8” hole in the location noted in step 2. Install the J-Snap Post with the “hook” of the post positioned to connect at the END of the strap.

Proper positioning of the J-Hook prevents the ladder from being deployed unintentionally.

REVO Ladder Bow Mounts *(sold separately)* allow the ladder to be moved from stern to bow. Install bow mount kits to the following specifications:

1. Install bow mounts on the starboard side only.

2. The same installation procedure should be used to install the mount brackets as outlined above.

3. Bow mount kits utilize just one handle which must be installed on the left side of the ladder to allow the J-Snap to be installed.

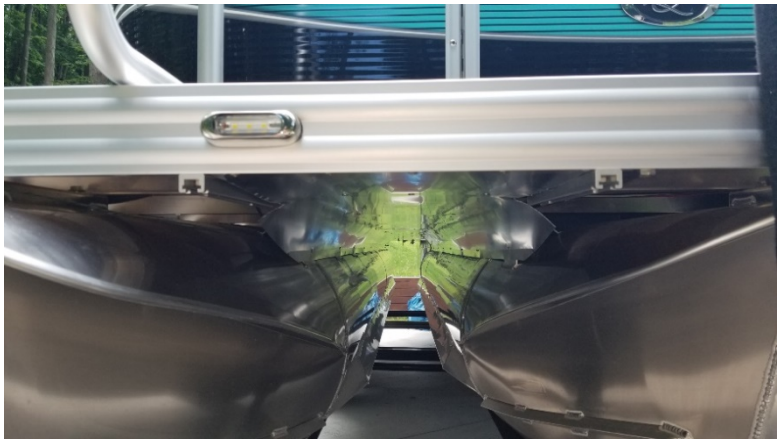

FOR INSTALLATION QUESTIONS CONTACT:

LilliPad Marine

cschaub@lillipadmarine.com

800-279-3419